WIFI MODULE

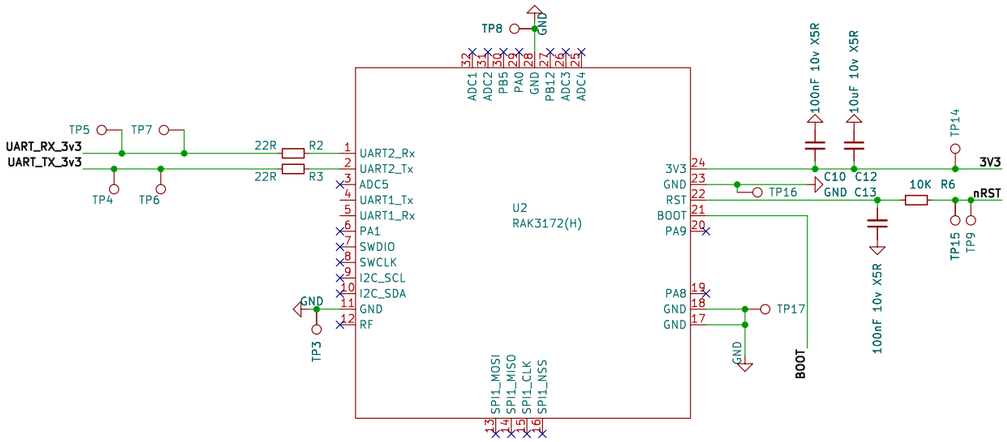

HOST CONNECTOR

We use a 2x10 female pin socket as it fits perfectly in a 2x8 shrouded pin header on the host side. We don't use a 2x8 pin socket as it is narrower than a 2x8 shrouded header and can allowing off-by-1 pin insertion. We don't use a 2x8 keyed pin sockets are they seem to be very uncommon.

The two pins Ver_1 and Ver_2 allow the host board/MCU to detect what type and version of communication board is connected. Each Ver_1/2 pin has a 40.2k resistor to GND on the host side, and the resisitor loaded on the Cicada daugthter board (this PCB) creates a voltage divider that is then read by the host MCU as an analog voltage

The Ver_1 pin describes the type of Cicada comms board (eg 2G, 3G/4G, WIFI etc) and the Ver_2 pin is the release version of the Cicada PCB/BOM (as relevant to the host HW/FW).

See the table for the resistor -> version number relationship. Note that the resistor of this board is the R_Bottom

Note that these version resistors only code for version changes that are relevant for FW or need to be tracked remotely. The full part release version (eg P-1000072-V4.0.1) may increment without triggering a version resistor change

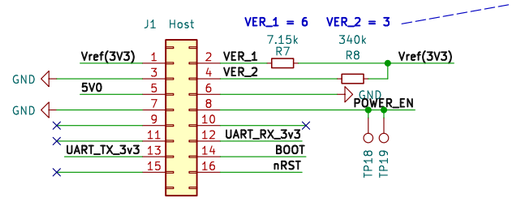

VER_1 (Cicada type)

0	Dev
1	
2	2G
3	
4	4G
5	
6	WIFI
7	
8	Lora
9	

Version	V_in	ADC voltage	R bottom	R_bottom	Standard
0	3.3	0	40200	#DIV/0!	DNP
1	3.3	0.35	40200	338829	340K
2	3.3	0.7	40200	149314	150K
3	3.3	1.05	40200	86143	86.6K
4	3.3	1.4	40200	54557	54.9K
5	3.3	1.75	40200	35606	35.7K
6	3.3	2.1	40200	22971	22.6K
7	3.3	2.45	40200	13947	14K
8	3.3	2.8	40200	7179	7.15K
9	3.3	3.15	40200	1914	1.91K

POWER SUPPLY

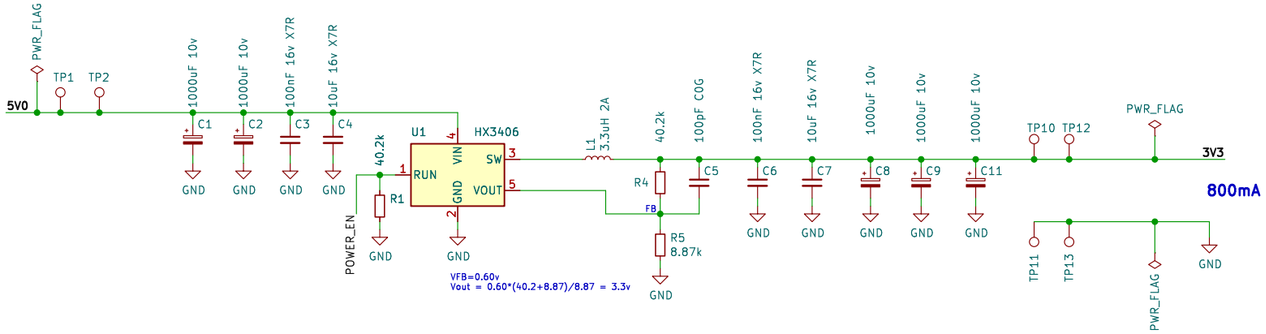

Fiducials, Munting Holes, Logos, PCB

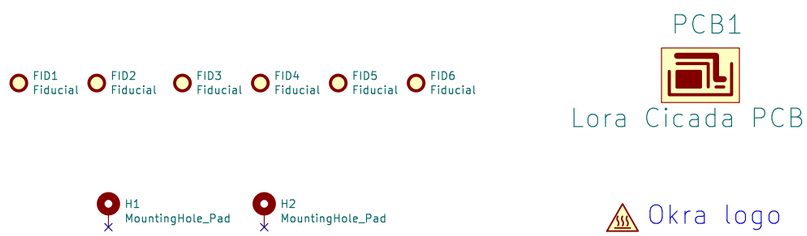

Aditya Chandrasekaran / Okra Solar

Sheet: /
File: P-1000099_Cicada Lora.kicad_sch

Title: WiFi Cicada

Size: A3	Date: 2021-02-15	Rev: 0.0
KiCad E.D.A. 9.0.4		Id: 1/1